EROSION & SEDIMENT CONTROL GENERAL NOTES

1. The Contractor will be responsible for the implementation and maintenance of sediment and erosion control measures on the site prior to and during construction. All erosion control structures are to be maintained in proper functioning order and are to be replaced as necessary.
2. All construction activities involving the removal or disposition of soil are to be provided with appropriate protective measures to minimize erosion and contain sediment disposition within. Minimum soil erosion and sediment control measures shall be implemented as shown on the plans and shall be installed in accordance with "New York State Standards and Specifications for Erosion and Sediment Control," latest edition and the Town Code.
3. Wherever feasible, natural vegetation should be retained and protected.
4. Only the smallest practical area of land should be exposed at any one time during development, and the exposure shall be kept to the shortest practical period of time. Disturbance shall be limited to the areas required to perform construction.
5. Stabilized construction entrance and silt fencing shall be installed if and as shown on the drawing prior to beginning any clearing and grubbing or earthwork.
6. Filter fabric for silt fence is to be Mirafi 140 as manufactured by the Celanese Corporation or approved equal unless otherwise indicated.
7. All topsoil to be stripped from the area being developed shall be stockpiled as shown on the plan and immediately seeded with Manhattan rye grass.
8. Any graded areas not subject to further disturbance or construction traffic shall, within 10 days of final grading, receive permanent vegetation cover in combination with a suitable mulch. All seeded areas to receive a minimum of 4" topsoil and be seeded and mulched as per "New York State Standards for Erosion and Sediment Control," latest edition.
9. Grass seed mix may be applied by either mechanical or hydroseeding methods. Hydroseeding shall be performed in accordance with the current edition of the "NYSDOT Standard Specification, Construction and Materials, Section 610-3.02, Method No. 1."
10. All cut slopes and embankment fills are to be immediately laid back and stabilized as follows:
    a. Grade to finished slopes.
    b. Scarified.
    c. Topsoiled with not less than four inches of suitable topsoil material.
    d. Seeded with Manhattan rye grass. Seed shall be applied at the rate of not less than five pounds per 1,000 square feet.
    e. Mulched with not less than one inch and not more than three inches of straw (two tons per acre) and anchored in a suitable manner.
11. All embankments are to be graded and seeded immediately upon being laid back.
12. On all embankment fill slopes, topsoil shall be stripped at least five (5) feet wider than required for the embankment toe of slope. A protective berm of topsoil shall be left in this area, running parallel to the contours for the purpose of restricting drainage runoff. The topsoil berm shall be seeded as required for stockpiles.
13. Paved and gravel roadways shall be kept clean at all times.
14. The site shall at all times be graded and maintained such that all stormwater runoff is diverted to soil erosion and sediment control facilities.
15. All storm drainage outlets shall be stabilized, as required, before the discharge points become operational.
16. Stormwater from disturbed areas must be passed through erosion control barrier before discharge beyond disturbed areas or discharged into other drainage systems.
17. Sedimentation and erosion control measures shall be inspected and maintained on a daily basis by the Contractor to insure that channels, temporary and permanent ditches and pipes are clear of debris, that embankments and berms have not been breached and that all straw bales and silt fences are intact. Any failure of sediment and erosion control measures shall be immediately repaired by the Contractor and inspected for approval by the O.F.R. and/or Town Engineer.
18. Dust shall be controlled by sprinkling or other approved methods as necessary, or as directed by the Engineer.
19. Cut and fills shall not endanger adjoining property, nor divert water onto the property of others.
20. All fills shall be compacted to provide stability of material and to prevent settlement.
21. The Contractor shall inspect downgrade conditions for evidence of sedimentation on a weekly basis and after rainstorms. The contractor is responsible for separately maintaining a stormwater inspection monitoring program to satisfy Local, State, and Federal Agencies and permits.
22. As warranted by field conditions, special additional sedimentation and erosion control measures, as specified by the Project Engineer, Town Engineer, and/or the Town of Dover shall be installed by the Contractor.
23. Erosion control measures shall remain in place until all disturbed areas are suitably stabilized.

CONSTRUCTION SEQUENCE

1. Conduct a pre-construction conference on the site with the Owner, Contractor the Engineer and Town Representative.
2. Stake out disturbance zone limits, swale locations, rain garden, retaining wall, along with any other project components.
3. Install silt and barrier fence as shown on this plan and wherever else necessary.
4. Clear necessary vegetation within limits of construction.
5. Install temporary sedimentation measures including grass swales.
6. Demo existing building as necessary.
7. Cut slopes and remove rock to finish grade then stabilize.
8. Demo existing building and portion of curbs as necessary.
9. Construct new building, walkways, porches and canopies.
10. Install gutter swales, underdrain, level spreader and rain garden.
11. Install retaining wall, fencing, sewer and water connections.
12. Regrade driveways and stabilize shoulders.
13. Finish grade all areas and embankments, place topsoil and spread seed and mulch. Remove temporary sediment control measures after vegetation is established.

E & S. C. MAINTENANCE PLAN

The Contractor shall be responsible for the continued maintenance of the erosion control measures, including repairs and replacement of any erosion control measures, as warranted. The Contractor shall inspect all erosion control measures following rainstorms to ensure all measures are properly functioning. Erosion control measures shall be checked weekly and shall be repaired as required.

SILT FENCE

1. Accumulated sediment must be removed periodically. The curtain must be inspected often and after each storm. Any damage must be repaired.

SITE INFORMATION

ADDRESS:	91 RAMAH ROAD WINGDALE, NY 12594
TAX MAP ID:	132600-7161-00-641450-0000
ZONING DIST:	RU
TOPO DATAM:	APPROXIMATE USGS
PARCEL AREA:	294.2 AC
SEWER:	ONSITE TILE FIELDS
WATER SUPPLY:	ONSITE WELL

OWNER / APPLICANT

OWNER:	JEWISH THEOLOGICAL SOCIETY OF AMERICA
ADDRESS:	25 ROCKWOOD PL. ENGLEWOOD, NJ 07631

NOTE:
SOIL BOUNDARIES HAVE BEEN REPRODUCED FROM NRCS WEB SOIL SURVEY DUTCHESS COUNTY, NEW YORK (NY027)

SOIL LEGEND

FcC	– FARMINGTON–GALWAY COMPLEX COMPLEX, ROLLING, VERY ROCKY
FcD	– FARMINGTON–GALWAY COMPLEX COMPLEX, HILLY, VERY ROCKY

DIG SAFE NOTE:

UTILITIES ARE PLOTTED FROM FIELD LOCATION AND ANY RECORD INFORMATION AVAILABLE, AND SHOULD BE CONSIDERED APPROXIMATE. OTHER UTILITIES MAY EXIST WHICH ARE NOT EVIDENT OR FOR WHICH RECORD INFORMATION WAS NOT AVAILABLE. CONTRACTORS MUST CONTACT ALL UTILITY COMPANIES BEFORE EXCAVATING AND DRILLING. CALL "DIG SAFELY NEW YORK" AT 1(800)962-7962.

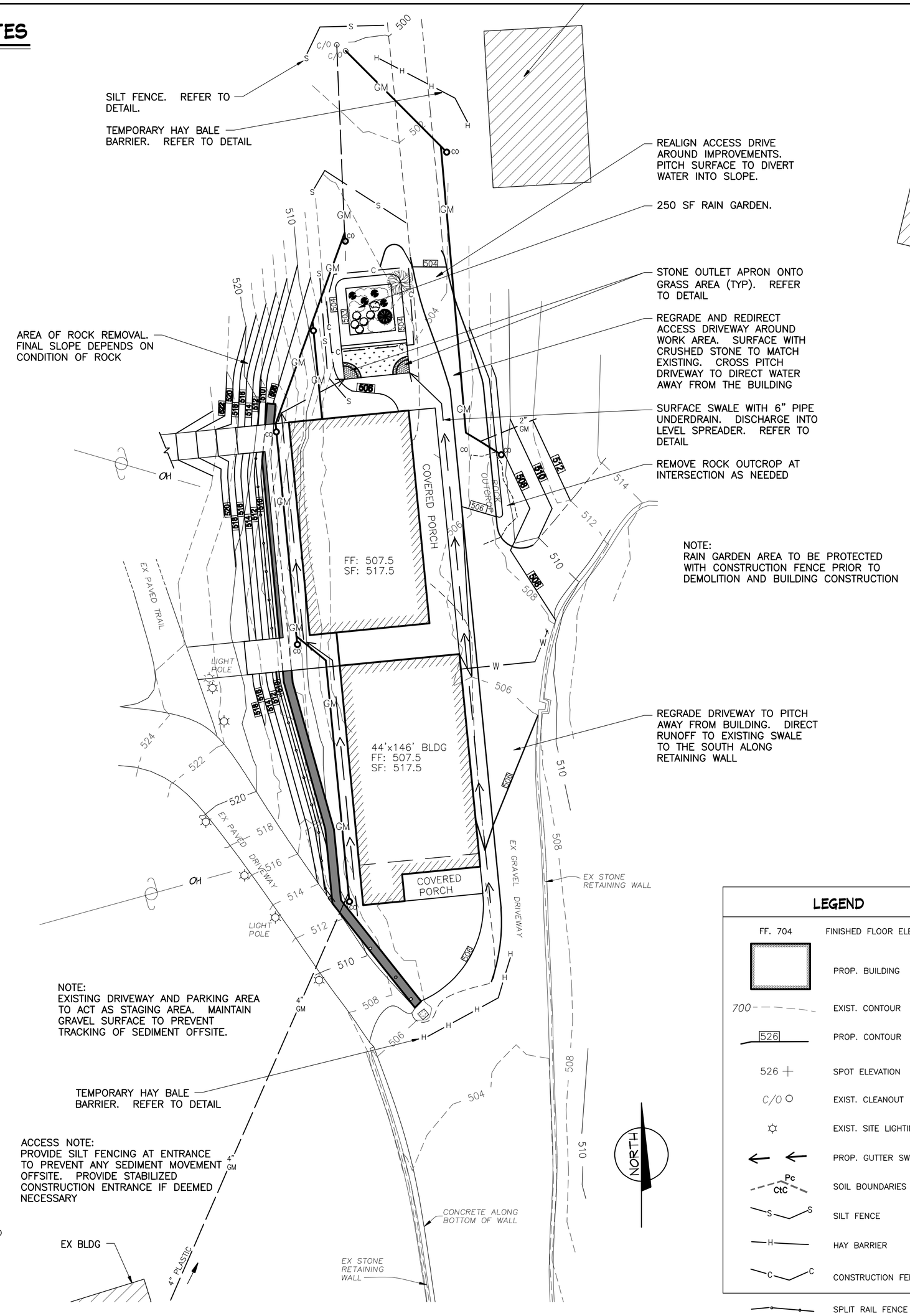

LEGEND

FF. 704	FINISHED FLOOR ELEVATION
	PROP. BUILDING
700	EXIST. CONTOUR
526	PROP. CONTOUR
526 +	SPOT ELEVATION
C/O	EXIST. CLEANOUT
	EXIST. SITE LIGHTING
	PROP. GUTTER SWALE
Pc CtC	SOIL BOUNDARIES
S S	SILT FENCE
H	HAY BARRIER
C C	CONSTRUCTION FENCE
	SPLIT RAIL FENCE

EROSION & SEDIMENT CONTROL PLAN

SCALE: 1 inch = 20 feet

GRAPHIC SCALE
20 0 10 20 50
(IN FEET)
1 inch = 20 ft.

NOTE:
ALTERATION OF THIS DOCUMENT, UNLESS UNDER THE DIRECTION OF A LICENSED PROFESSIONAL ENGINEER, IS A VIOLATION OF SECTION 7209 OF ARTICLE 145 OF THE EDUCATION LAW.

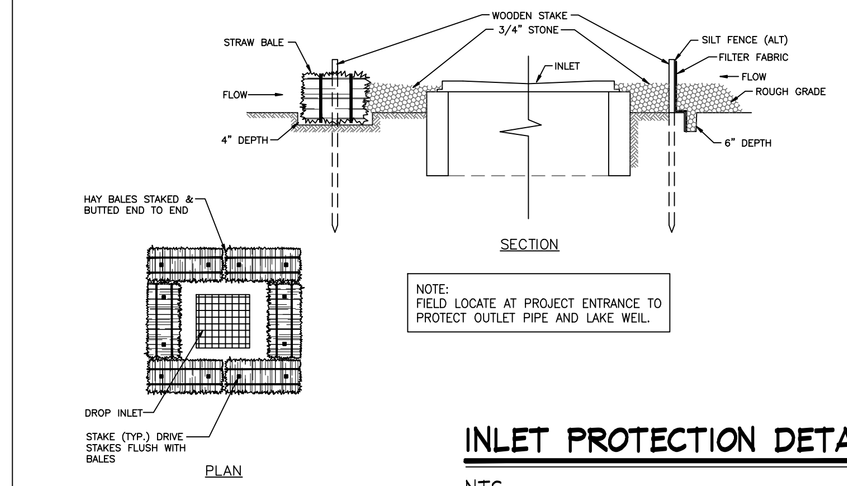

INSTALLATION NOTES

STRAW BALES

1. PLACE BALES OF STRAW WITH ENDS TIGHTLY ABUTTING OTHER BALES TO SURROUND THE INLET. WHERE SLOPE AND SPACE PERMIT, ESTABLISH THE LINES OF BALES 2 TO 20 FEET AWAY FROM INLET. ANCHOR BALES IN PLACE BY DRIVING REBARS OR 2" X 2" STAKES THROUGH THE BALES. SUPPLEMENT WITH GRAVEL, PILED AGAINST THE BALES.
2. SEDIMENT SHALL BE REMOVED AND THE TRAP RESTORED TO ITS ORIGINAL DIMENSIONS WHEN THE SEDIMENT HAS ACCUMULATED TO 1/2 THE DESIGN DEPTH OF THE TRAP. REMOVED SEDIMENT SHALL BE DEPOSITED IN A SUITABLE AREA AND IN SUCH A MANNER THAT IT WILL NOT ERODE.
3. THE STRUCTURE SHALL BE INSPECTED AFTER EACH RAIN AND REPAIRS MADE AS NEEDED.
4. CONSTRUCTION OPERATIONS SHALL BE CARRIED OUT IN SUCH A MANNER THAT EROSION AND WATER POLLUTION SHALL BE MINIMIZED.
5. THE SEDIMENT TRAP SHALL BE REMOVED AND THE AREA STABILIZED WHEN THE REMAINING DRAINAGE AREA HAS BEEN PROPERLY STABILIZED.

SILT FENCE– ALTERNATE

1. EXCAVATE A 6" X 6" TRENCH, OFFSET 2 FEET FROM THE INLET PERIMETER.
2. INSTALL SILT FENCE AROUND PERIMETER WITH STAKES FACING STRUCTURE.
3. DRIVE THE POST INTO THE GROUND UNTIL THE NETTING IS IN TRENCH.
4. LAY THE TOE–IN FLAP OF FABRIC INTO TRENCH. BACKFILL FLAP.
5. JOIN SECTIONS AS SHOWN ABOVE. SUPPLEMENT WITH GRAVEL, PILED AGAINST FENCE.

INLET PROTECTION DETAIL

NTS

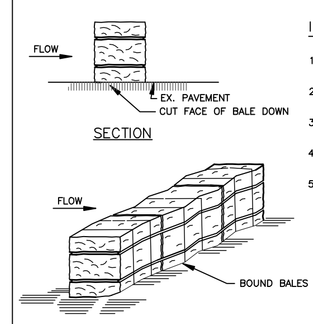

INSTALLATION NOTES

1. DRAINAGE AREA, NO MORE THAN 1/4 ACRE, PER 100 FEET OF STRAW BALE DIKE FOR SLOPES LESS THAN 25%.
2. BALES SHALL BE PLACED ON THE BLACKTOP IN A ROW WITH ENDS TIGHTLY ABUTTING THE ADJACENT BALES.
3. BALES SHALL BE INSTALLED AT THE END OF EACH WORK DAY UNTIL THE PARKING LOT IS INSTALLED AT THE SHOULDERS STABILIZED.
4. INSPECTION SHALL BE FREQUENT AND REPAIR/REPLACEMENT SHALL BE MADE PROMPTLY AS NEEDED.
5. BALES SHALL BE REMOVED WHEN THEY NO LONGER FUNCTION SO AS NOT TO BLOCK OR IMPEDE STORM FLOW OR DRAINAGE.

HAY BALE PROTECTION BERM DETAIL

NTS

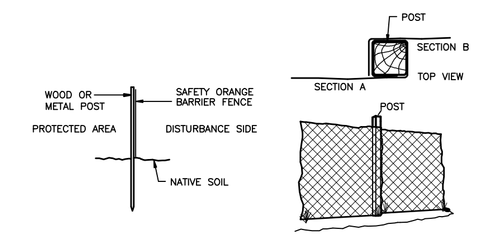

INSTALLATION NOTES

1. LOCATE RAIN GARDEN LINE AS PER PLAN AND NO CLOSER THAN 4' FROM SILT FENCE.
2. POSITION THE POSTS ALONG THE LINE ON 10' CENTERS OR AS DICTATED BY SITE CONDITIONS. DRIVE POSTS INTO GROUND UNTIL FIRMLY PLACED.
3. UNROLL BARRIER FENCING AND ZIP TIE FENCING TO DISTURBANCE SIDE OF POSTS WHILE PULLING FENCING TAUNT.
4. JOIN SECTIONS AS SHOWN ABOVE.
5. PERIODICALLY INSPECT FENCING TO CONFIRM THAT IT IS UPRIGHT AND IN SOUND CONDITION. IMMEDIATELY REPAIR ANY DAMAGED LOCATIONS.

CONSTRUCTION FENCE DETAIL

NTS

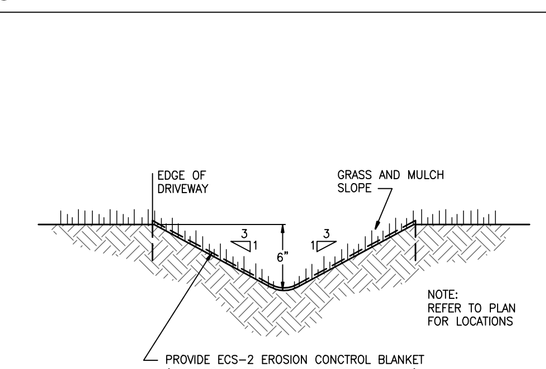

GRASS DIVERSION SWALE

NTS

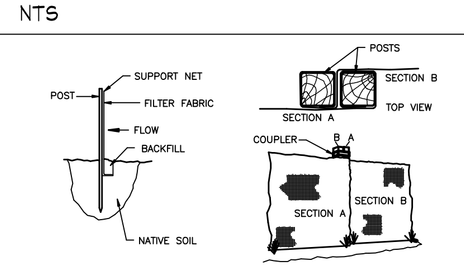

INSTALLATION NOTES

1. EXCAVATE A 4 INCH TRENCH ALONG THE LOWER PERIMETER OF THE SITE.
2. UNROLL A SECTION AT A TIME AND POSITION THE POSTS AGAINST THE BACK (DOWNSTREAM) WALL OF THE TRENCH (NET SIDE AWAY FROM DIRECTION OF FLOW).
3. DRIVE THE POST INTO THE GROUND UNTIL THE NETTING IS APPROXIMATELY 2 INCHES FROM THE TRENCH BOTTOM.
4. LAY THE TOE–IN FLAP OF FABRIC ONTO THE UNDISTURBED BOTTOM OF THE TRENCH, BACKFILL THE TRENCH AND TAMP THE SOIL. STEEPER SLOPES REQUIRE AN INTERCEPT TRENCH.
5. JOIN SECTIONS AS SHOWN ABOVE.

SILT FENCE DETAIL

NTS

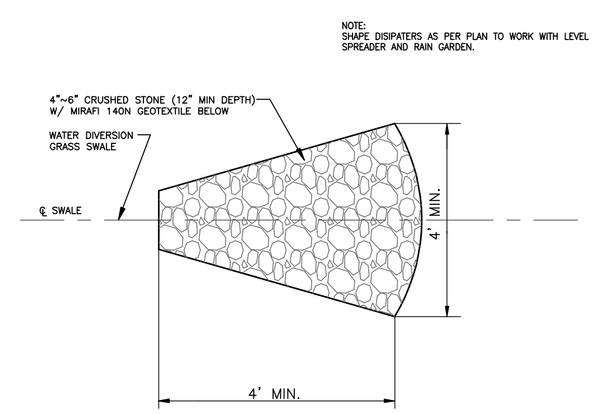

RIP-RAP SWALE DISIPATER

NTS

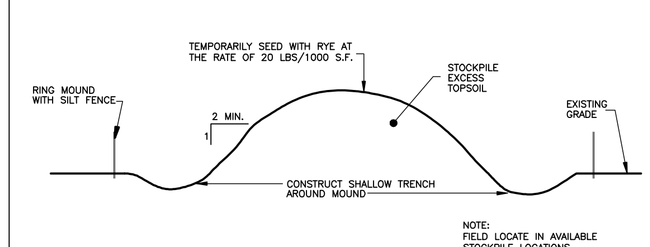

TOPSOIL STOCKPILE DETAIL

NTS

D.C. ENGINEERING, PC
JOHN A. KALIN, PE
NY'S LIC. NO 079804
OFFICE: 3 MEMORIAL AVE.
PAULING, NY 12564
PHONE: (845) 855-2000
FAX: (845) 855-2605
EMAIL: JKALIN@VERIZON.NET

NO.	DATE	REVISION	NO.	DATE	REVISION
	12/10/14	PLANNING BD SUBMITTAL			

PROJ: CAMP RAMAH — 91 RAMAH ROAD (T) DOVER, NY 12594

DWG: EROSION AND SEDIMENT CONTROL PLAN

SCALE: NOTED | DATE: NOV. 03, 2014 | SHT NO. 3 OF 3 | DWG NO: C-130

DRN BY: JAK | CHK'D BY: JK | PROJ: 110314