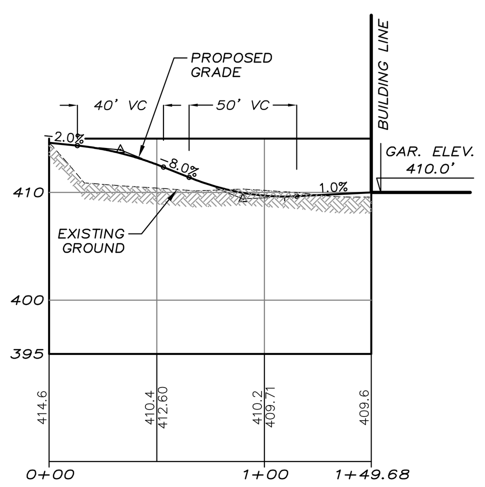

LOT 1 DRIVEWAY PROFILE
SCALE: HOR.: 1" = 50'
VERT.: 1" = 10'

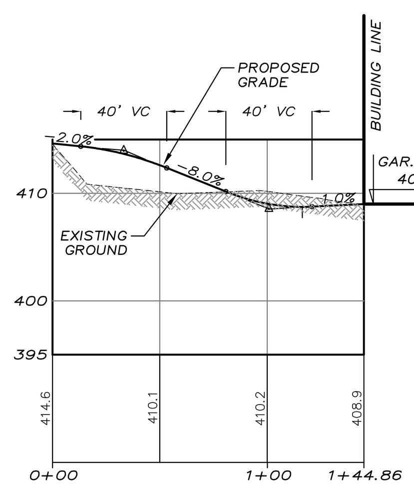

LOT 2 DRIVEWAY PROFILE
SCALE: HOR.: 1" = 50'
VERT.: 1" = 10'

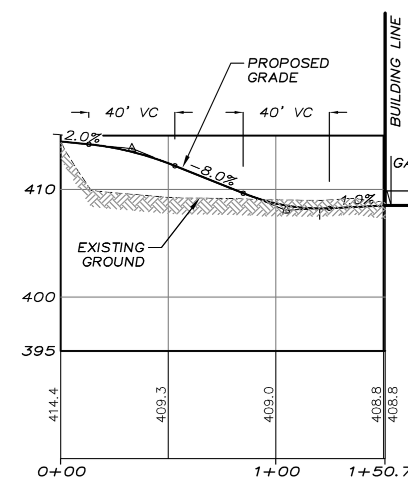

LOT 3 DRIVEWAY PROFILE
SCALE: HOR.: 1" = 50'
VERT.: 1" = 10'

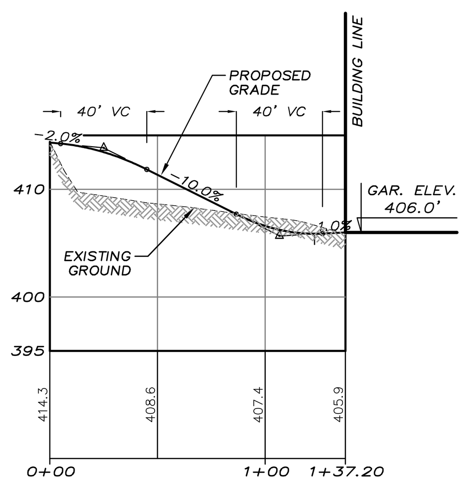

LOT 4 DRIVEWAY PROFILE
SCALE: HOR.: 1" = 50'
VERT.: 1" = 10'

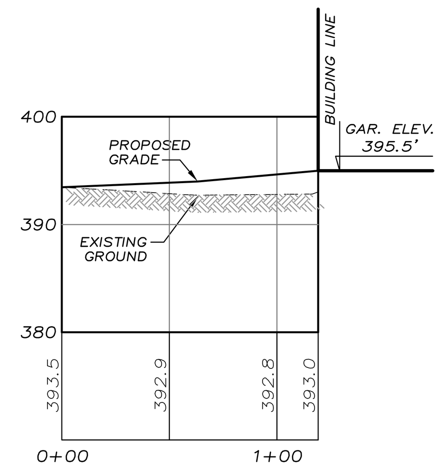

LOT 6 DRIVEWAY PROFILE
SCALE: HOR.: 1" = 50'
VERT.: 1" = 10'

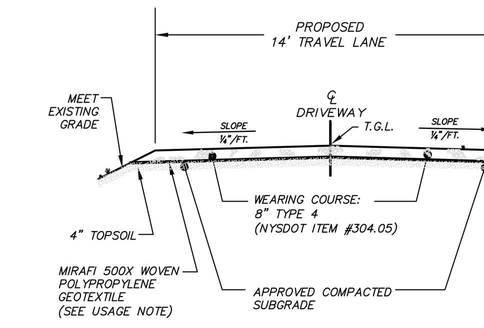

USAGE NOTE:
MIRAFI 500X WOVEN POLYPROPYLENE GEOTEXTILE UNDERLAYMENT SHALL BE INSTALLED PRIOR TO PLACING ITEM #4 IN ALL AREAS OF DRIVEWAY WIDENING AND NEW DRIVEWAY CONSTRUCTION

NOTE:
DRIVEWAY MUST BE PAVED 20' BACK FROM EXISTING WHITE LINE ON ROUTE 22.

LOTS 5-6 TYPICAL COMMON DRIVEWAY CROSS-SECTION DETAIL
N.T.S.

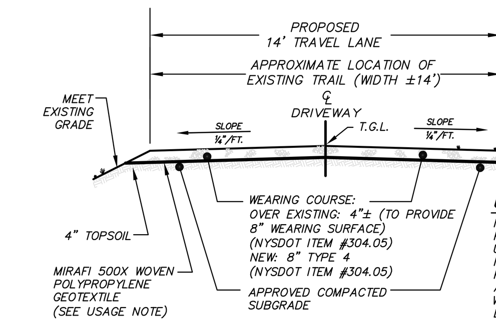

USAGE NOTE:
MIRAFI 500X WOVEN POLYPROPYLENE GEOTEXTILE UNDERLAYMENT SHALL BE INSTALLED PRIOR TO PLACING ITEM #4 IN ALL AREAS OF DRIVEWAY WIDENING AND NEW DRIVEWAY CONSTRUCTION

LOTS 5-6 COMMON DRIVEWAY CROSS-SECTION OVER EXISTING TRAIL (APPROX. STA: 8+10 THRU 12+25)
N.T.S.

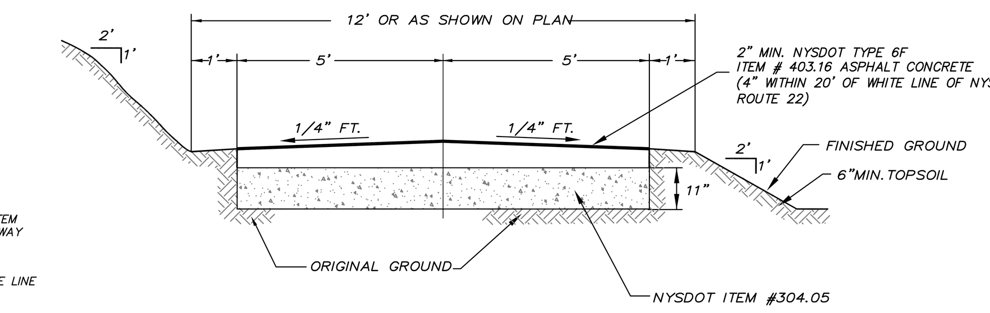

NOTE:
DRIVEWAYS MUST BE PAVED 20' BACK FROM EXISTING WHITE LINE ON NYS ROUTE 22

TYP. DRIVEWAY CROSS SECTION, LOTS 1-6 INDIVIDUAL DRIVEWAYS
N.T.S.

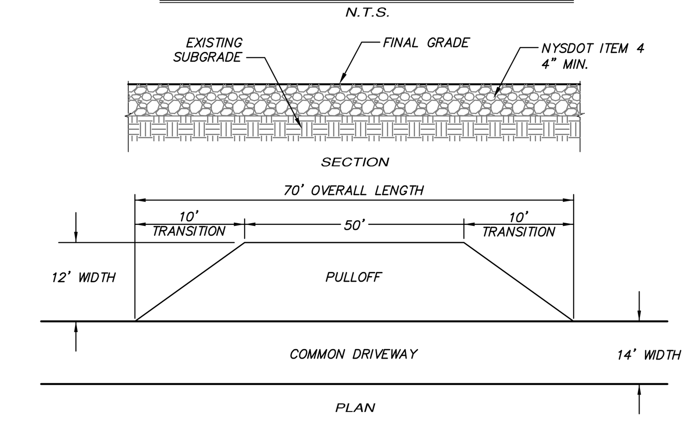

LOTS 5 - 6 COMMON DRIVEWAY PULLOFF DETAIL
N.T.S.

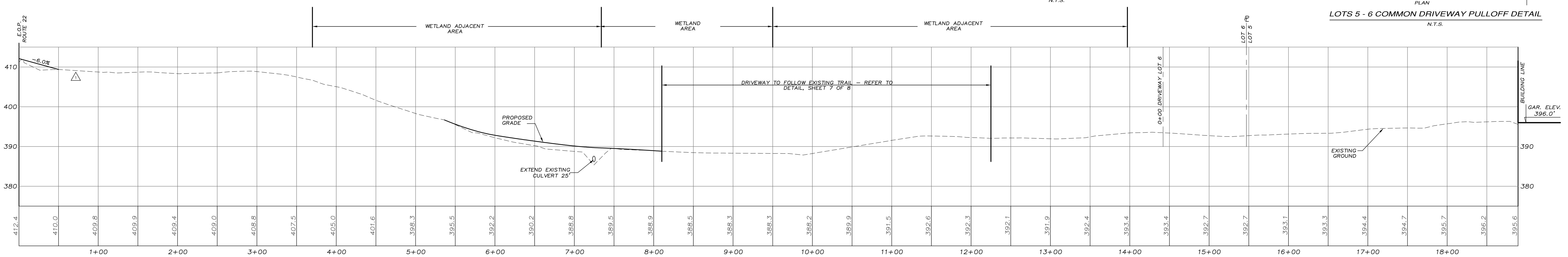

LOT 5/6 COMMON DRIVEWAY PROFILE
SCALE: HOR.: 1" = 50'
VERT.: 1" = 10'

LOT 5 DRIVEWAY PROFILE
SCALE: HOR.: 1" = 50'
VERT.: 1" = 10'

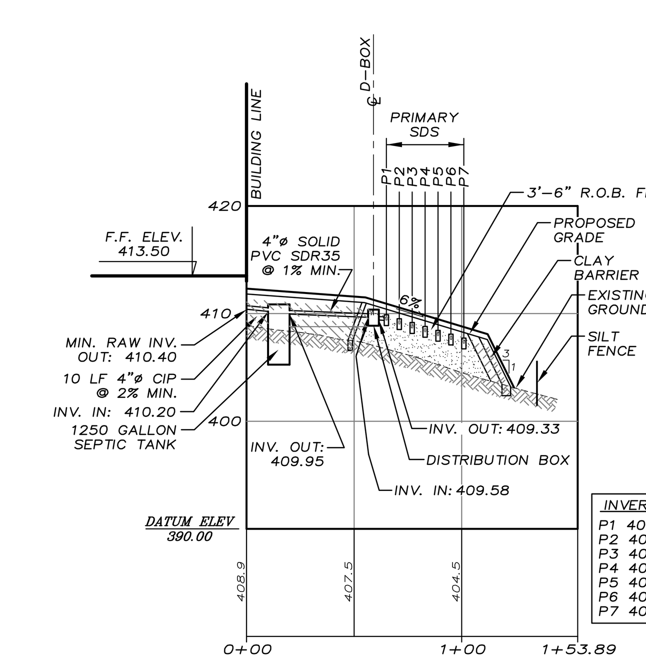

HYDRAULIC PROFILE-LOT 1
SCALE: HOR. 1"=50'
VERT. 1"=10'

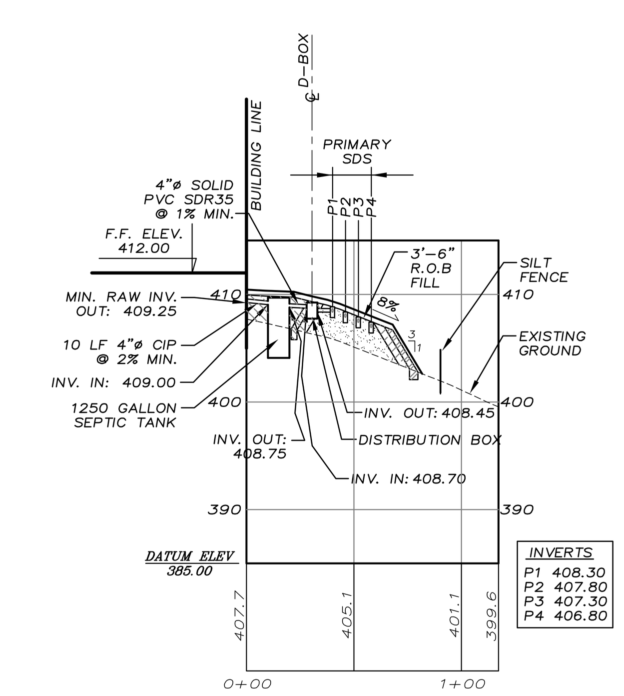

HYDRAULIC PROFILE-LOT 2
SCALE: HOR. 1"=50'
VERT. 1"=10'

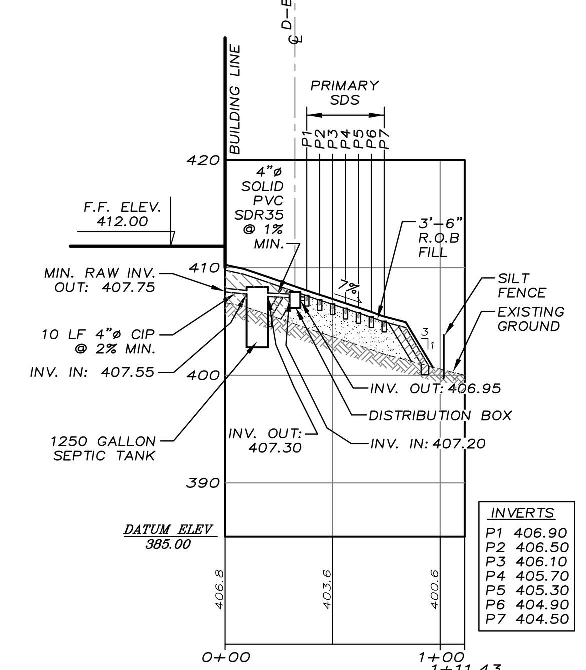

HYDRAULIC PROFILE-LOT 3
SCALE: HOR. 1"=50'
VERT. 1"=10'

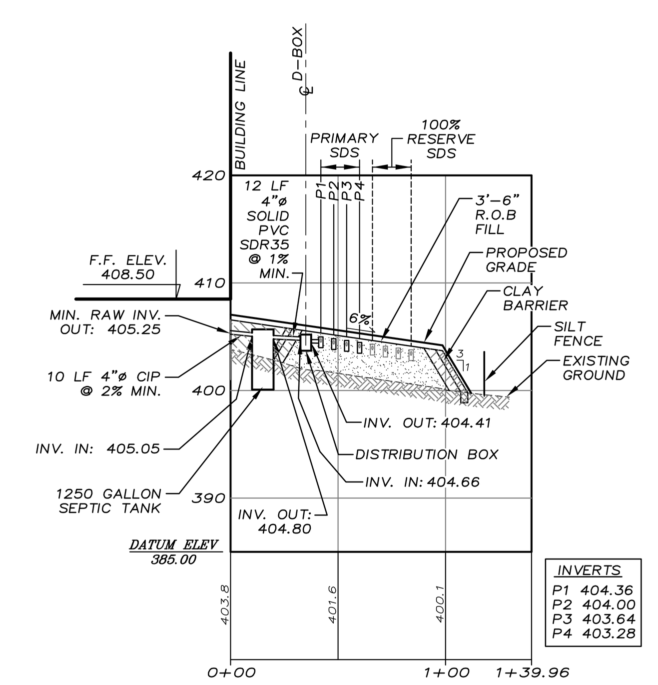

HYDRAULIC PROFILE-LOT 4
SCALE: HOR. 1"=50'
VERT. 1"=10'

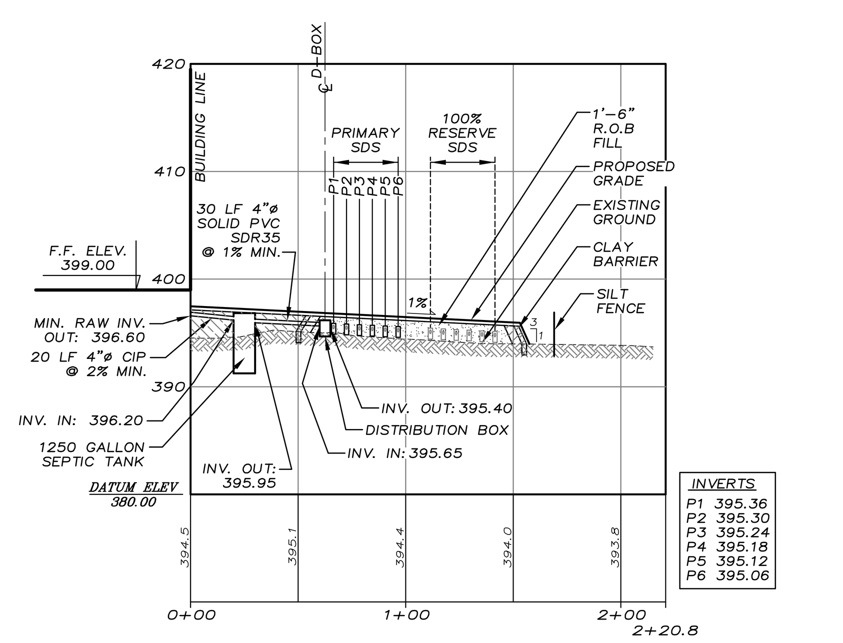

HYDRAULIC PROFILE-LOT 5
SCALE: HOR. 1"=50'
VERT. 1"=10'

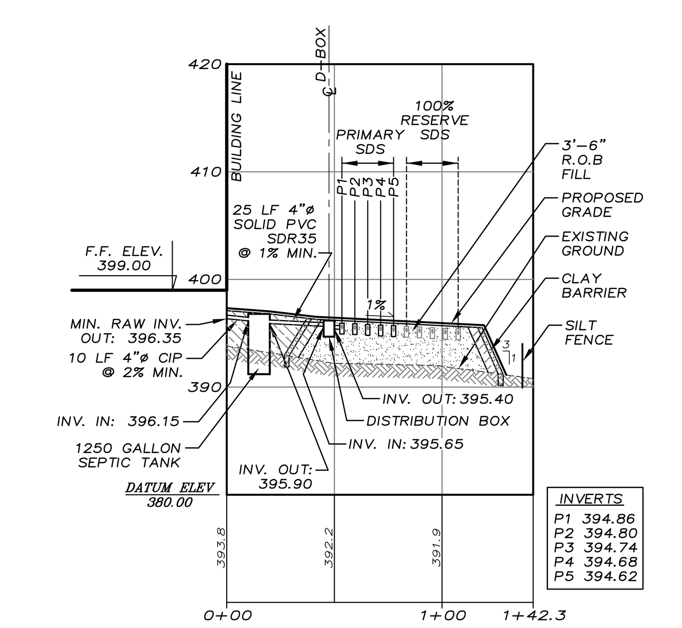

HYDRAULIC PROFILE-LOT 6
SCALE: HOR. 1"=50'
VERT. 1"=10'

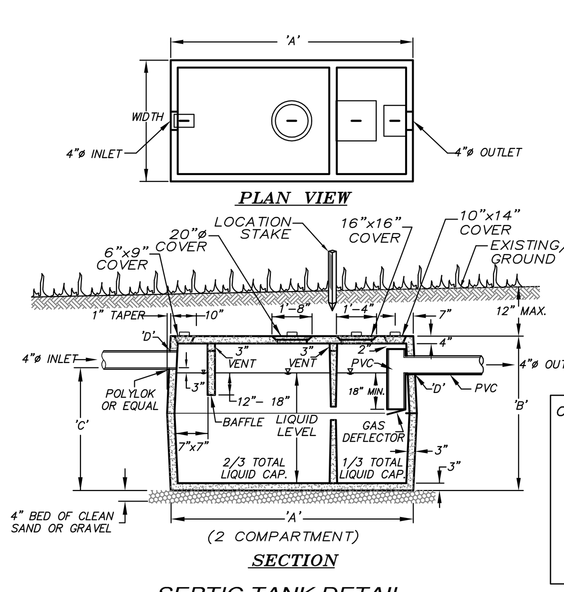

CAPACITY=	1,000 GAL.	1,250 GAL.
"A"=	8'-6"	10'-6"
"B"=	5'-5"	4'-8"
"C"=	4'-6"	3'-10"
WIDTH=	4'-10"	5'-8"
"D"=	0'-7"	0'-7"
LIQUID LEVEL=	4'-0"	3'-4"

SEPTIC TANK DETAIL
N.T.S.

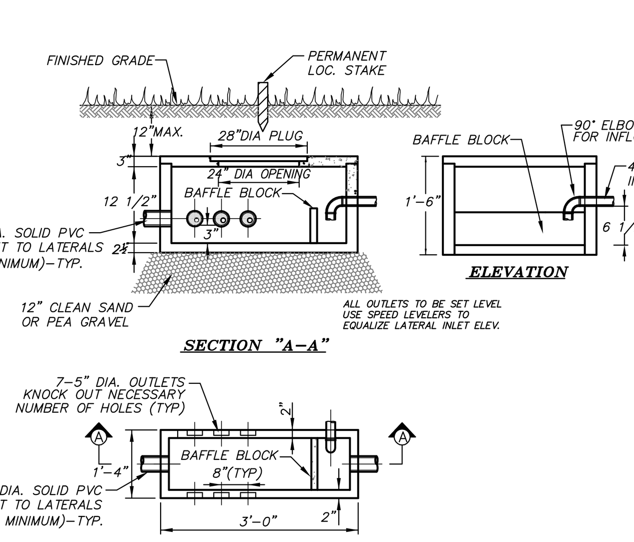

DISTRIBUTION BOX DETAIL
N.T.S.

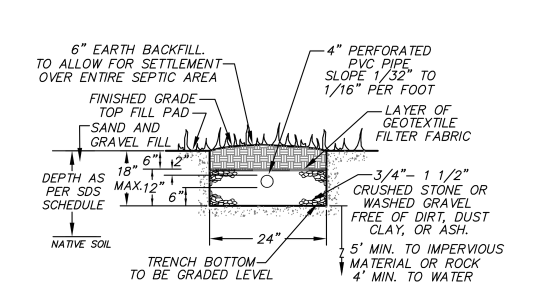

ABSORPTION TRENCH IN FILL DETAIL
N.T.S.

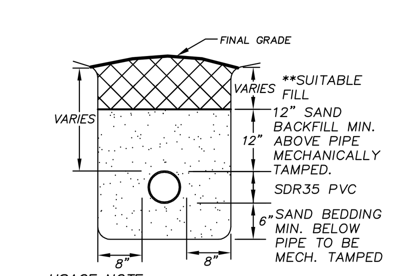

USAGE NOTE:
TO BE USED FROM:
– SEPTIC TANK TO DISTRIBUTION BOX
– DISTRIBUTION BOX TO ABSORPTION TRENCH

TRENCH DETAIL
N.T.S.

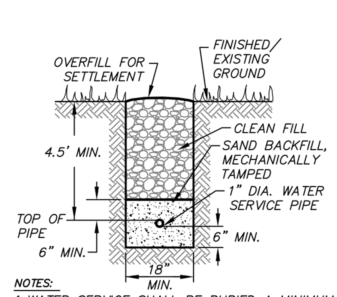

NOTES:
1. WATER SERVICE SHALL BE BURIED A MINIMUM OF 54" (4.5') BELOW FINISHED GRADE TO PREVENT FREEZING.
2. PROVIDE 24" TRENCH WIDTH IF EXCAVATED IN ROCK.
3. WATER SERVICE SHALL BE SEPARATED VERTICALLY A MINIMUM OF 18" (1.5') OR HORIZONTALLY A MINIMUM OF 10.0' AT ANY CROSSING.

WATER SERVICE TRENCH
N.T.S.

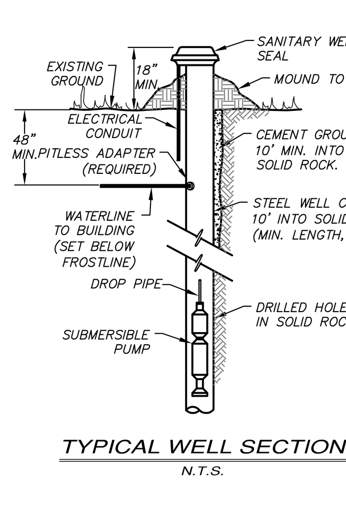

TYPICAL WELL SECTION
N.T.S.

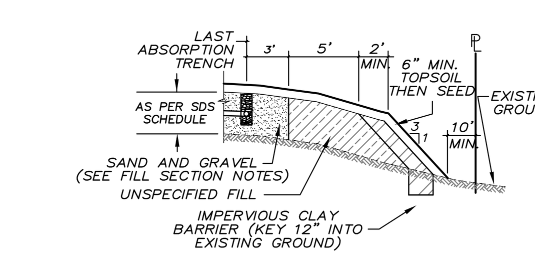

FILL SECTION NOTES:
1. ANY FILL AND IMPERVIOUS COVER MUST BE IN PLACE AND A PROFESSIONAL ENGINEER SHALL CERTIFY IN WRITING THAT ALL SOIL CONDITIONS INCLUDING THE MATERIAL, DIMENSIONS, AND LOCATION, ARE SATISFACTORY TO ALLOW INSTALLATION OF THE SEWAGE DISPOSAL SYSTEM.
2. SAND AND GRAVEL FILL SHOULD CONTAIN NO MORE THAN 5%, AND NO LESS THAN 2% FINES BY WEIGHT. FINES ARE CLAY AND SILT PARTICLES THAT PASS A 200 SIEVE; AND, NO MORE THAN 10% OF THE FILL MATERIAL SHOULD PASS A 100 SIEVE. SAND AND GRAVEL FILL MATERIAL SHALL HAVE A STABILIZED PERCOLATION RATE WHICH IS LESS THAN, OR EQUIVALENT TO THE PERCOLATION RATE OF THE VIRGIN SOIL, AND NO MORE THAN 15 MINUTES PER INCH DROP. THE DESIGN ENGINEER SHALL CERTIFY IN WRITING THAT THE FILL MATERIAL IS IN THE PROPER PLACE, IS OF PROPER QUANTITY AND DIMENSIONS, AND IS OF PROPER QUALITY. PROPER QUALITY MUST BE DEMONSTRATED BY STABILIZED PERCOLATION TESTS. PERCOLATION TEST RESULTS SHALL BE SUBMITTED WITH THE ENGINEER'S CERTIFICATION.
3. A MATERIAL WHOSE COMPOSITION IS SATISFACTORY FOR USE IN EMBANKMENT CONSTRUCTION IS DESIGNATED AS A SUITABLE MATERIAL. THE MOISTURE CONTENT HAS NO BEARING UPON SUCH DESIGNATION. IN GENERAL, ANY MINERAL (INORGANIC) SOIL, BLASTED OR BROKEN ROCK AND SIMILAR MATERIALS OF NATURAL OR MAN MADE ORIGIN, INCLUDING MIXTURES OF THEREOF, ARE CONSIDERED AS SUITABLE MATERIALS. DETERMINATIONS OF WHETHER A SPECIFIC MATERIAL IS A SUITABLE MATERIAL SHALL BE MADE BY THE ENGINEER ON THE ABOVE BASIS.
4. FILL MUST BE STABILIZED BY ALLOWING THE FILL MATERIAL TO SETTLE NATURALLY FOR A PERIOD OF AT LEAST 6 MONTHS AND INCLUDE AT LEAST ONE (1) FREEZE-THAW CYCLE OR FILL STABILIZATION MAY BE ACHIEVED BY MECHANICAL COMPACTION IN APPROXIMATELY 6 INCH LIFTS TO THE APPROXIMATE DENSITY OF THE UNDISTURBED UNDERLYING SOIL.

5. PRIMARY AND EXPANSION AREAS ARE TO BE FILLED CONCURRENTLY.

FILL SECTION DETAIL
N.T.S.

811 Know what's below. Call before you dig. or 800-962-7962

1	REVISED PER NYSDOT COMMENTS	AB	3/11/2014

JOSEPH ZARECKI, PE.
LIC. N.Y. No. 61468

LICENSED IN N.Y. & CT.

DRIVEWAY PROFILES AND DETAILS
MEADOW BROOK SUBDIVISION
PREPARED FOR
MEADOW BROOK PROPERTIES, LLC
TOWN OF DOVER, DUTCHESS COUNTY, NEW YORK

DATE: 10-29-2013 PROJECT NO.: 2004.004

ZARECKI & ASSOCIATES, L.L.C.
Consulting Engineers - Land Surveyors - Architects
11 West Main St. Pawling, NY 12564
845.855.3771
845.855.3772 (Fax)
Ridgefield, CT 06877
203.438.7094

SHEET NO.