PLAN VIEW

1"=100'

0 100' 200'

1" = 100'
GRAPHIC SCALE

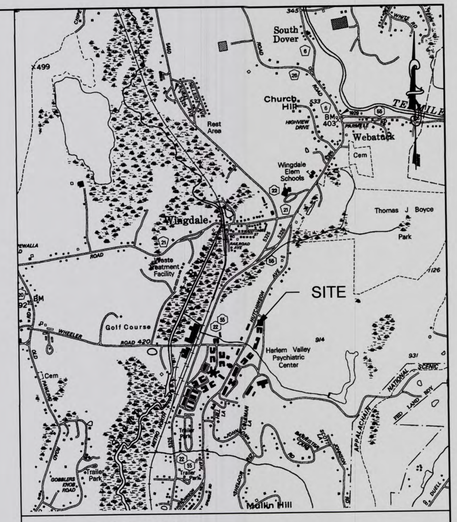

VICINITY PLAN SCALE: 1" = 2000'

SITE DATA

ZONING DISTRICT: "HM" HAMLET MIXED USE
"HR" HAMLET RESIDENTIAL
"RU" RURAL
"CO" COMMERCIAL

LOT SIZE: 502.97 ACRES
TAX GRID No. : 132600-7159-00-162702
PROPERTY ADDRESS: 207 HUTCHINSON AVE
WINGDALE, NY 12594
PROPERTY OWNER: OLIVET MANAGEMENT, LLC
WINGDALE, NY 12594

SOIL EROSION AND SEDIMENT CONTROL NOTES:

1. ALL SOIL EROSION AND SEDIMENT CONTROL DEVICES SHALL BE INSTALLED IN ACCORDANCE WITH THE NEW YORK STANDARD AND SPECIFICATIONS FOR EROSION AND SEDIMENT CONTROL MANUAL. (REFERRED TO IN REMAINING TEXT AS "NEW YORK STANDARDS AND SPECIFICATIONS".)

2. ANY DISTURBED AREAS THAT WILL BE LEFT EXPOSED MORE THAN FOURTEEN (14) DAYS, AND ARE NOT SUBJECT TO CONSTRUCTION TRAFFIC, SHALL IMMEDIATELY RECEIVE A TEMPORARY SEEDING. IF THE SEASON PREVENTS THE ESTABLISHMENT OF A TEMPORARY COVER, THE DISTURBED AREAS SHALL BE MULCHED WITH STRAW OR EQUIVALENT MATERIAL. THE SEEDING SHALL BE DONE IN ACCORDANCE WITH THE NEW YORK STANDARDS AND SPECIFICATIONS, AS FOLLOWS:
   A) FERTILIZER: THE FERTILIZER SHALL BE APPLIED AT A RATE OF FOURTEEN (14) POUNDS PER ONE THOUSAND SQUARE FEET, USING 5-10-10 OR EQUAL.
   B) SEED: ANNUAL RYE GRASS APPLIED AT A RATE OF 30 LBS./ACRE OR OTHER SELECT MIXTURE AS DESCRIBED IN THE NEW YORK GUIDELINES.
   C) MULCH: SALT-HAY OR SMALL GRAIN STRAW APPLIED AT A RATE OF NINETY (90) POUNDS PER ONE THOUSAND SQUARE FT. OR TWO (2) TONS PER ACRE. TO BE APPLIED AND ANCHORED ACCORDING TO THE NEW YORK STANDARDS AND SPECIFICATIONS.
   D) IN AREAS OF SLOPES STEEPER THAN ONE ON THREE AND IN DRAINAGE CHANNELS WHERE RUNOFF VELOCITIES EXCEED 2.5 FEET PER SECOND, JUTE MATTING SHALL BE USED TO STABILIZE SEEDED AND/OR PLANTED AREAS. JUTE MATTING SHALL BE INSTALLED AND ANCHORED IN ACCORDANCE WITH THE NEW YORK STANDARDS AND SPECIFICATIONS.

3. ANY GRADED AREAS NOT SUBJECT TO FURTHER DISTURBANCE OR CONSTRUCTION TRAFFIC SHALL, WITHIN TEN (10) DAYS AFTER FINAL GRADING, RECEIVE PERMANENT VEGETATIVE COVER IN COMBINATION WITH A SUITABLE MULCH AS FOLLOWS:
   A) FERTILIZER: FERTILIZER APPLIED AT A RATE OF TWENTY (20) POUNDS PER ONE THOUSAND SQUARE FEET USING 14-28-15 OR EQUAL.
   B) SEED MIXTURE: TO BE PLANTED BETWEEN APRIL 1ST AND MAY 15TH OR BETWEEN AUGUST 15TH AND OCTOBER 15TH. MIXTURE SHALL BE 30% KENTUCKY BLUEGRASS BLEND, 50% PERENNIAL RYE GRASS AND 20% FINE FESCUE. SEED AT RATE OF 4 LBS./1000 SQUARE FEET.
   C) MULCH: SALT-HAY OR SMALL GRAIN STRAW APPLIED AT A RATE OF NINETY (90) POUNDS PER ONE THOUSAND SQUARE FEET OR TWO (2) TONS PER ACRE TO BE APPLIED AND ANCHORED ACCORDING TO THE NEW YORK STANDARDS AND SPECIFICATIONS.
   D) IN AREAS OF SLOPES STEEPER THAN ONE ON THREE AND IN DRAINAGE CHANNELS WHERE RUNOFF VELOCITIES EXCEED 2.5 FEET PER SECOND, "BioNet SC150BN" OR EQUAL EROSION CONTROL MATTING SHALL BE USED TO STABILIZE SEEDED AND/OR PLANTED AREAS. "BioNet SC150BN" SHALL BE INSTALLED AND ANCHORED IN ACCORDANCE WITH THE MANUFACTURES INSTRUCTIONS AS WELL AS THE NEW YORK STANDARDS AND SPECIFICATIONS.

4. SLOPES STEEPER THAN ONE ON THREE SHALL BE STABILIZED IMMEDIATELY AFTER GRADING.

5. PAVED ROADWAYS SHALL BE KEPT CLEAN AT ALL TIMES.

6. THE SITE SHALL AT ALL TIMES BE GRADED AND MAINTAINED SUCH THAT ALL STORM WATER RUNOFF IS DIVERTED TO SOIL EROSION OR SEDIMENT CONTROL FACILITIES. EXCEPT FOR MINOR PERIMETER EMBANKMENT AREAS, ALL GRADED AREAS SHALL BE DIRECTED THROUGH ONE OF THE SEDIMENT BARRIERS. DIVERSION SWALES MAY BE USED TO DIRECT DRAINAGE RUNOFF UNTIL THE PERMANENT STORM DRAINAGE SYSTEM IS IN PLACE.

7. DUST SHALL BE CONTROLLED BY SPRINKLING OR OTHER APPROVED METHODS.

8. STOCKPILES SHALL NOT BE LOCATED WITHIN FIFTY FEET (50') OF ROADWAYS OR DRAINAGE FACILITIES. THE BASE OF ALL STOCKPILES SHALL BE PROTECTED BY SILT FENCE.

9. SOIL EROSION AND SEDIMENT CONTROL MEASURES SHALL BE INSPECTED AND MAINTAINED BY THE CONTRACTOR ON A DAILY BASIS TO ENSURE THAT TEMPORARY AND PERMANENT DITCHES, PIPES AND STRUCTURES ARE CLEAR OF DEBRIS, THAT EMBANKMENTS AND BERMS ARE NOT BREACHED, AND THAT ALL BARRIERS ARE INTACT.

10. ALL SOIL EROSION AND SEDIMENTATION CONTROL MEASURES SHALL BE MAINTAINED BY THE CONTRACTOR UNTIL FINAL ACCEPTANCE OF THE SITE WORK BY THE OWNER. UPON CERTIFICATION OF FINAL ACCEPTANCE, THE OWNER WILL ASSUME RESPONSIBILITY FOR THE CONTINUED MAINTENANCE OF PERMANENT SOIL EROSION AND SEDIMENTATION CONTROL MEASURES.

11. THE STABILIZED CONSTRUCTION ENTRANCE SHALL BE INSTALLED PRIOR TO ANY GRADING WORK BEING DONE ON SITE.

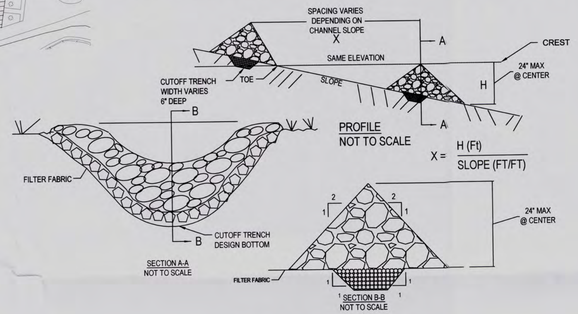

STONE CHECK DAM

SCALE: N.T.S.

CONSTRUCTION SPECIFICATIONS

1. STONE WILL BE PLACED ON A FILTER FABRIC FOUNDATION TO THE LINES, GRADES AND LOCATIONS SHOWN IN THE PLAN.
2. SET SPACING OF CHECK DAMS TO ASSUME THAT THE ELEVATIONS OF THE CREST OF THE DOWNSTREAM DAM IS AT THE SAME ELEVATION OF THE TOE OF THE UPSTREAM DAM.
3. EXTEND THE STONE A MINIMUM OF 1.5 FEET BEYOND THE DITCH BANKS TO PREVENT CUTTING AROUND THE DAM.
4. PROTECT THE CHANNEL DOWNSTREAM OF THE LOWEST CHECK DAM FROM SCOUR AND EROSION WITH STONE OR LINER AS APPROPRIATE.
5. ENSURE THAT CHANNEL APPURTENANCES SUCH AS CULVERT ENTRANCES BELOW CHECK DAMS ARE NOT SUBJECT TO DAMAGE OR BLOCKAGE FROM DISPLACED STONE. MAXIMUM DRAINAGE AREA 2 ACRES.

CONSTRUCTION SEQUENCE (GENERAL DISTURBANCE AREA <5.0 ACRES)

1. INSTALL STABILIZED CONSTRUCTION ENTRANCE.
2. DETERMINE AREA OF DISTURBANCE THAT DOES NOT EXCEED 5 ACRES.
3. INSTALL SILT FENCE AS REQUIRED
4. ESTABLISH VEGETATIVE BUFFER AREAS.
5. GRUB AND SELECTIVELY REMOVE TREES WHERE NEEDED
6. RE-GRADE AREAS AS NEEDED.
7. FINISH MISCELLANEOUS FINE GRADING WHERE NEEDED.
8. SEED & MULCH OR SOD DISTURBED AREAS.
9. REMOVE TEMPORARY EROSION CONTROLS ONCE VEGETATION IS ESTABLISHED

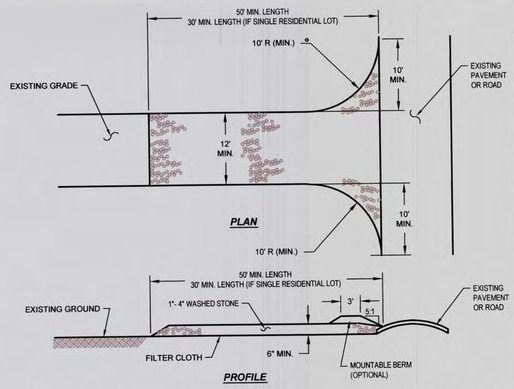

STABILIZED CONSTRUCTION ENTRANCE DETAIL

SCALE: N.T.S.

NOTES:

1. USE 1"-4" STONE, OR RECLAIMED OR RECYCLED CONCRETE EQUIVALENT.
2. STABILIZED CONSTRUCTION ENTRANCE SHALL NOT BE LESS THAN 50' IN LENGTH (EXCEPT ON A SINGLE RESIDENCE LOT WHERE A 30' MINIMUM LENGTH WOULD APPLY).
3. PAD THICKNESS SHALL NOT BE LESS THAN 6".
4. 12' MINIMUM WIDTH, BUT NOT LESS THAN THE FULL WIDTH AT POINTS WHERE INGRESS OR EGRESS OCCURS.
5. GEOTEXTILE SHALL BE PLACED OVER THE ENTIRE AREA PRIOR TO THE PLACING OF STONE. FILTER WILL NOT BE REQUIRED ON A SINGLE FAMILY RESIDENCE LOT.
6. ALL SURFACE WATER FLOWING OR DIVERTED TOWARD CONSTRUCTION ENTRANCES SHALL BE PIPED ACROSS THE ENTRANCE. IF PIPING IS IMPRACTICAL, A MOUNTABLE BERM WITH 5:1 SLOPES SHALL BE PERMITTED.
7. THE ENTRANCE SHALL BE MAINTAINED IN A CONDITION WHICH WILL PREVENT TRACKING OR FLOWING OF SEDIMENT ONTO PUBLIC RIGHTS-OF-WAY. THIS MAY REQUIRE PERIODICALLY REPLACEMENT OR USE OF ADDITIONAL STONE AS CONDITIONS DEMAND AND REPAIR AND/OR CLEANOUT OF ANY MEASURES USED TO TRAP SEDIMENT. ALL SEDIMENT DROPPED, WASHED OR TRACKED ONTO PUBLIC RIGHTS-OF-WAY MUST BE REMOVED IMMEDIATELY.
8. WHEN WASHING IS REQUIRED, IT SHALL BE DONE ON AN AREA STABILIZED WITH STONE AND WHICH DRAINS INTO AN APPROVED SEDIMENT TRAPPING DEVICE.
9. PERIODIC INSPECTION AND NEEDED MAINTENANCE SHALL BE PROVIDED AFTER EACH RAIN.

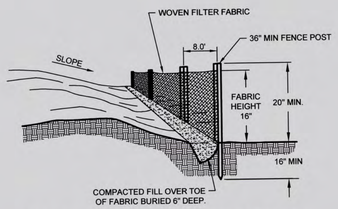

TYPICAL SILT FENCE DETAIL

N.T.S.

NOTES:

1. LOCATE POSTS DOWNSIDE OF FABRIC TO HELP SUPPORT FENCING.
2. BURY TOE OF FENCE APPROXIMATELY 8" DEEP TO PREVENT UNDERCUTTING.
3. WHEN JOINTS ARE NECESSARY, SECURELY FASTEN THE FABRIC AT A SUPPORT POST WITH OVERLAP TO THE NEXT POST.

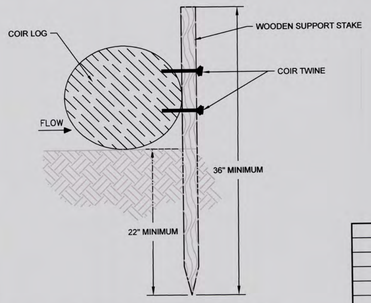

TYPICAL COIR LOG DETAIL

N.T.S.

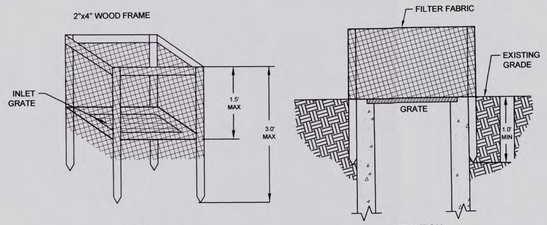

FILTER FABRIC INLET PROTECTION

N.T.S.

CONSTRUCTION NOTES:

1. FILTER FABRIC SHALL HAVE AN EOS OF 40-85. BURLAP MAY BE USED FOR SHORT TERM APPLICATIONS.
2. CUT FABRIC FROM A CONTINUOUS ROLL TO ELIMINATE JOINTS. IF JOINTS ARE NEEDED THEY WILL BE OVERLAPPED TO THE NEXT STAKE.
3. STAKE MATERIALS WILL BE STANDARD 2" X 4" WOOD OR EQUIVALENT METAL WITH A MINIMUM LENGTH OF 3 FEET.
4. SPACE STAKES EVENLY AROUND INLET 3 FEET APART AND DRIVE A MINIMUM OF 18" DEEP. SPANS GREATER THAN 3 FEET MAY BE BRIDGED WITH THE USE OF WIRE MESH BEHIND THE FILTER FABRIC FOR SUPPORT.
5. FABRIC SHALL BE EMBEDDED 1 FOOT MINIMUM BELOW GROUND AND BACKFILLED. IT SHALL BE SECURELY FASTENED TO THE STAKES AND FRAME.
6. A 2" X 4" WOOD FRAME SHALL BE COMPLETED AROUND THE CREST OF THE FABRIC FOR OVER FLOW STABILITY.

DATE	REVISION

ENGINEERING, DESIGN, & PLANS PREPARED BY:

RENNIA ENGINEERING DESIGN, PLLC

CIVIL & ENVIRONMENTAL ENGINEERING

6 Dover Village Plaza, Suite 5, P.O. Box 400, Dover Plains, NY 12522
Tel: (845) 877-0555 Fax: (845) 877-0556

Copyright 2008, All Rights Reserved

IT IS A VIOLATION OF NEW YORK STATE EDUCATION LAW FOR ANY PERSON TO ALTER THESE PLANS, SPECIFICATIONS OR REPORTS IN ANY WAY, UNLESS ACTING UNDER THE DIRECTION OF A LICENSED PROFESSIONAL ENGINEER.

OCT 2 9 2013

THE OLIVET CENTER

TOWN OF DOVER DUTCHESS COUNTY, NY

EROSION & SEDIMENT CONTROL PLAN

DATE	SCALE	DESIGNED BY:	DRAWN BY:	CHECKED BY:	JOB NO.	SHEET NO.
10/28/13	1"=100'	RAR	RED	RAR	13-019	1 of 1